SAMSUNG

3 CD CHANGER MINI COMPONENT SYSTEM

BASIC MODEL: MAX-C570
MAX-C550

SERVICE Manual

MINI COMPONENT SYSTEM

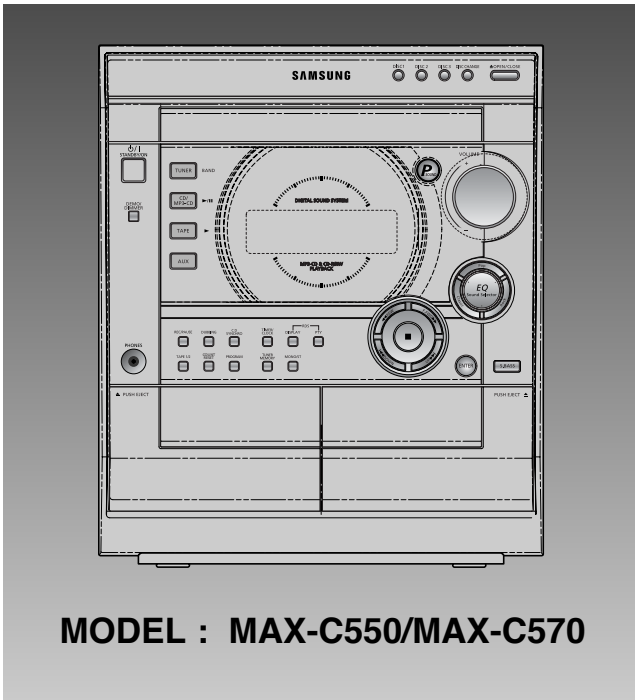

MODEL : MAX-C550/MAX-C570

Features

* MP3-CD/ CD-R/ RW Playback
* Tuner
* Tape Deck

- Confidential -

Notice !! You can search for the updated part code through ITSELF web site.
URL; http://itself.sec.samsung.co.kr

Downloaded from www.Manualslib.com manuals search engine

9. Block Diagram

MAIN , FRONT AND POWER PART

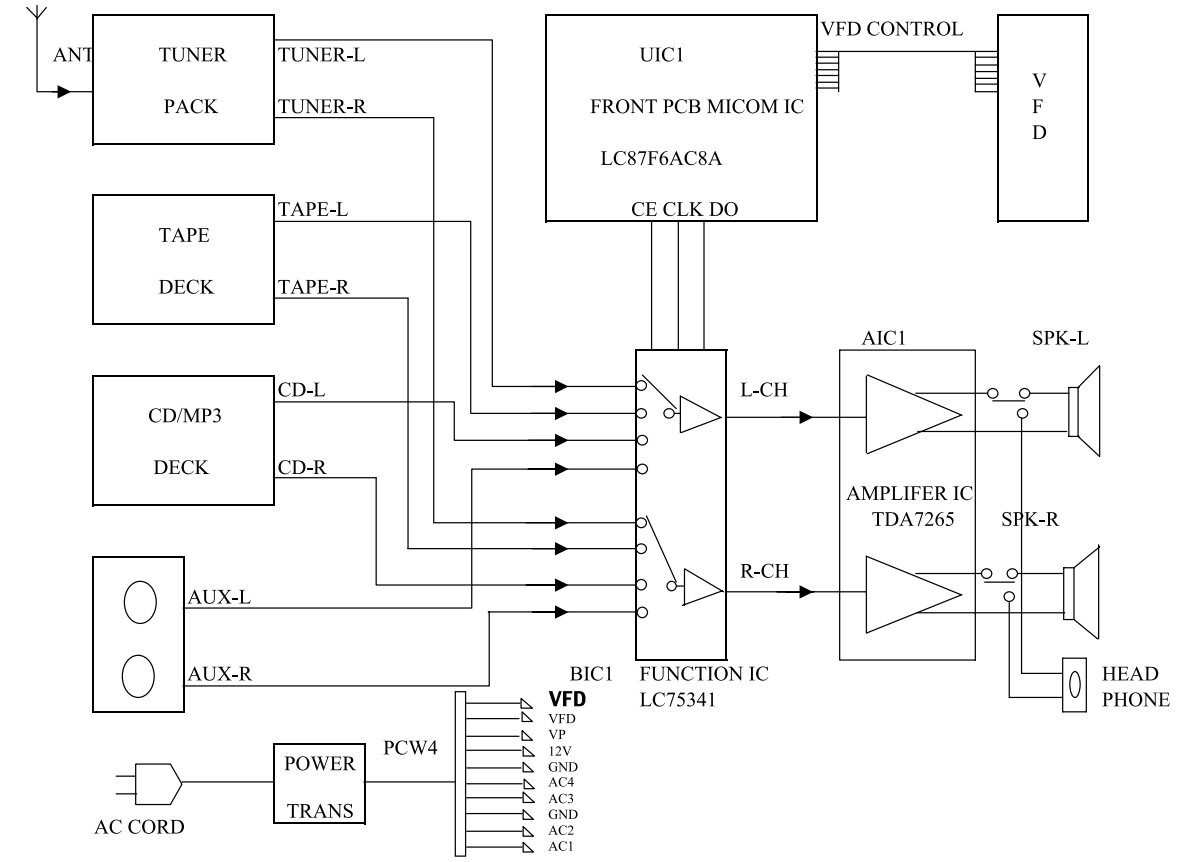

Downloaded from www.Manualslib.com manuals search engine

10. Wiring Diagram

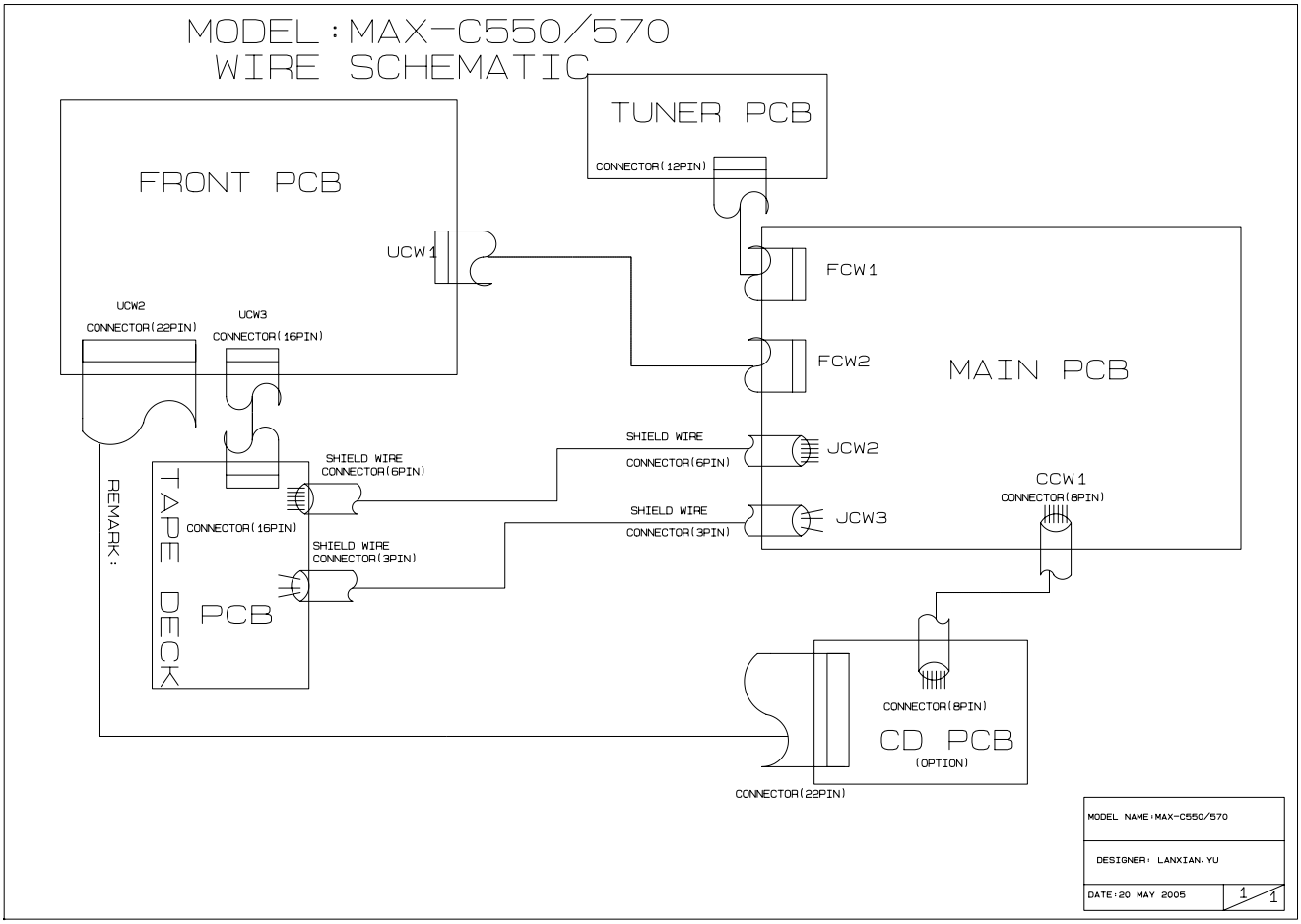

Downloaded from www.Manualslib.com manuals search engine

1-1. MAIN

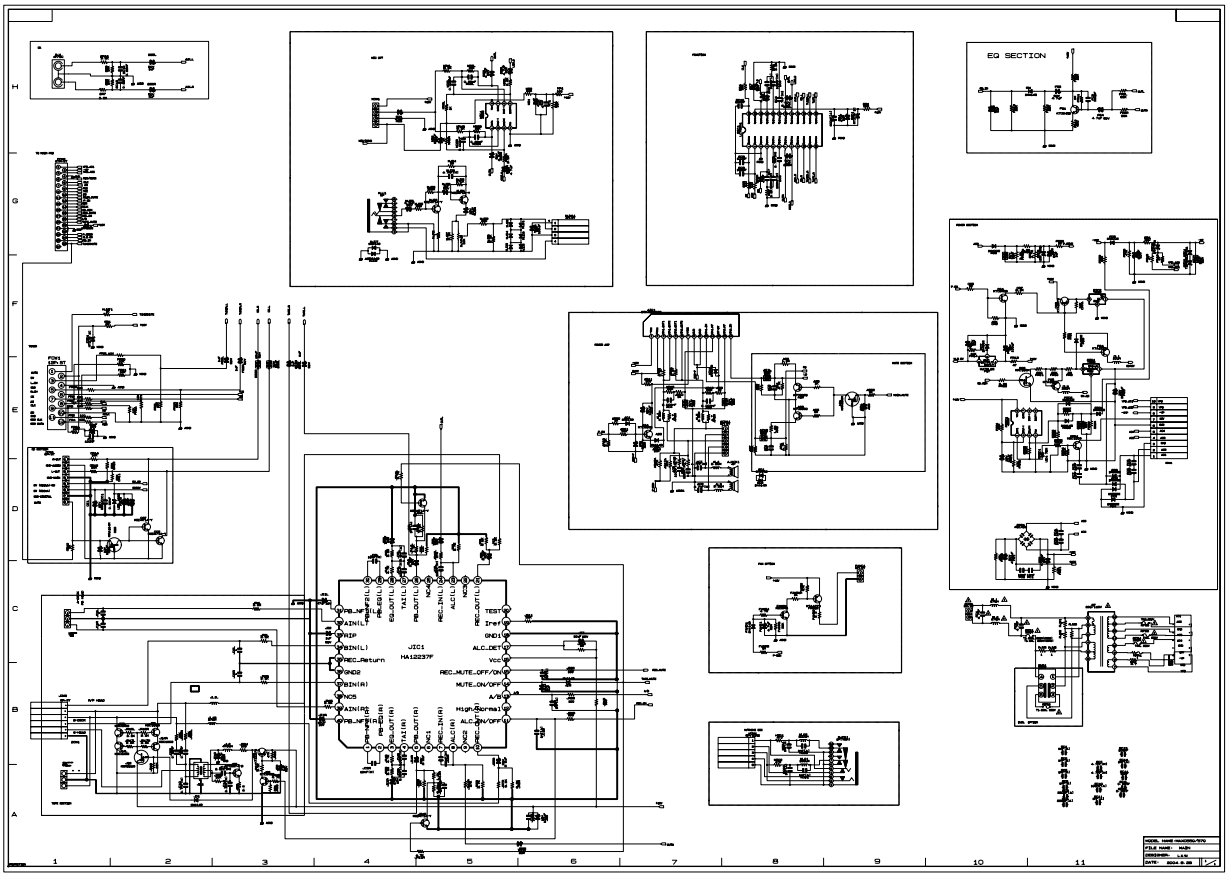

Downloaded from www.Manualslib.com manuals search engine

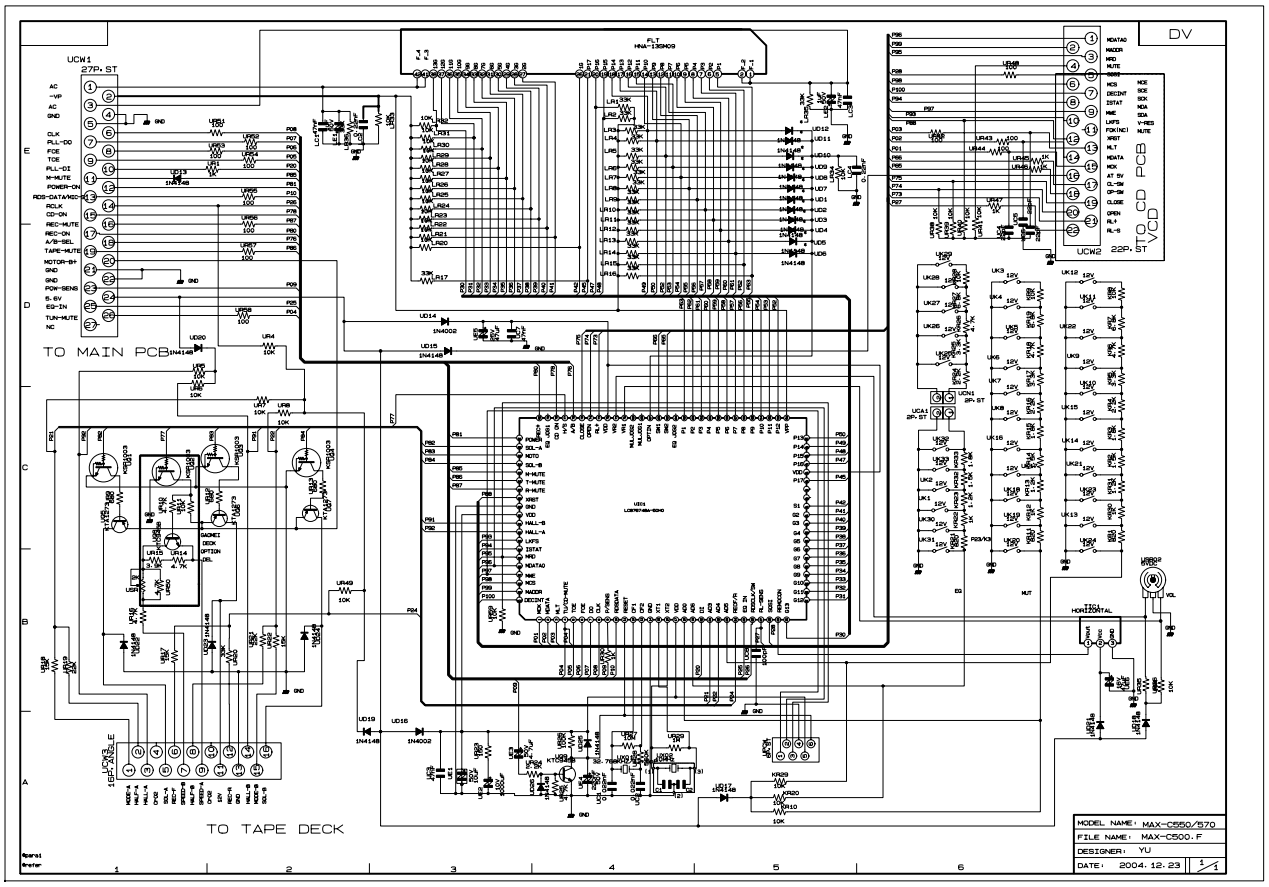

Downloaded from www.Manualslib.com manuals search engine